Parallel Resonance

- Like series RLC circuits, the resonance condition can be achieved in parallel RLC circuits by varying the frequency of the exciting source.
- In a parallel RLC circuit, the circuit will behave as a purely resistive circuit at resonance and this circuit condition is called parallel resonance.
- However, the current supplied by the source is minimum in parallel resonance, which is why parallel resonance is also called anti-resonance.
- For simplicity in analysis, parallel circuits can be analysed in terms of admittance.
- In admittance, the inductive and capacitive susceptances have opposite signs and they are functions of frequency.
- Hence, when the susceptances are varied by varying the frequency of the exciting source
- There is a possibility that the inductive susceptance cancels the capacitive susceptance at a particular frequency.

- Therefore, the total susceptance is zero and the circuit will behave as a purely resistive circuit.
- Now, the circuit will be in resonance and the frequency at which resonance occurs is called resonant frequency.
- The effective resistance of the RLC parallel circuit at resonance is called dynamic resistance.

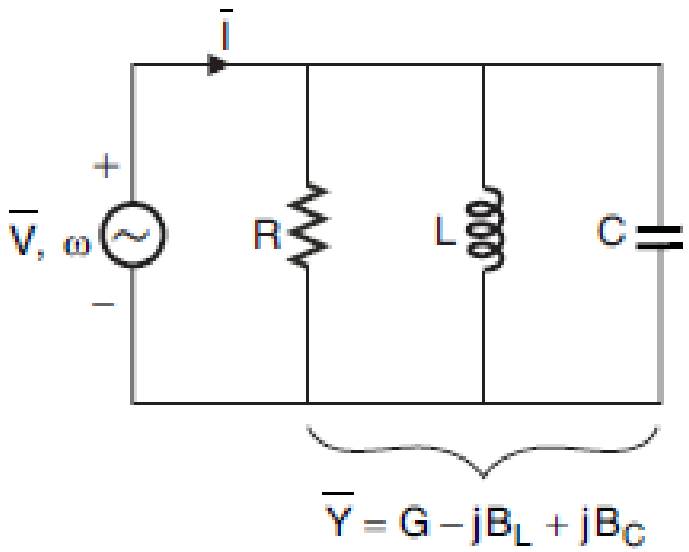

In a parallel RLC circuit, we may come across the following four combinations of R, L and C circuits, as also shown in Fig. 5.8.

Case i : *R, L and C are in parallel.*

Case ii : *A branch with R_1 and L in series is parallel with another branch with R_2 and C in series.*

Case iii : *A branch with R_1 and L in series is parallel with C.*

Case iv : *A branch with R_2 and C in series is parallel with L.*

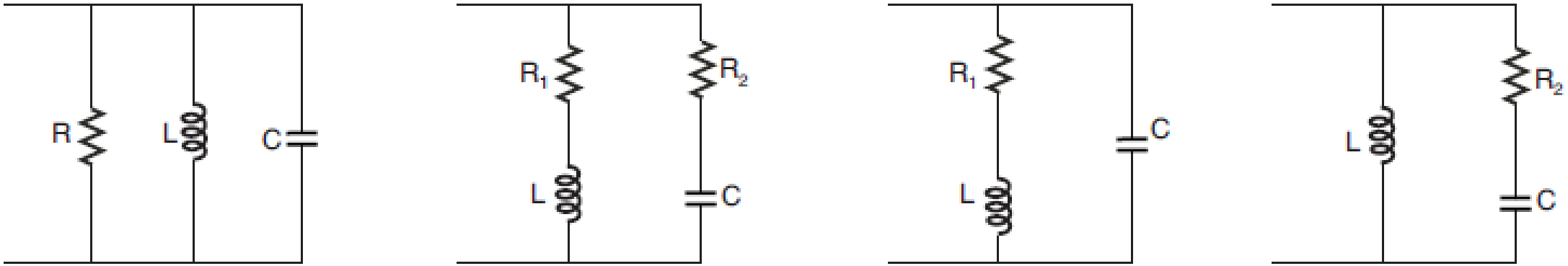

Fig. a : *R, L and C are in parallel.*

Fig. b : *RL parallel with RC.*

Fig. c : *RL parallel with C.*

Fig. d : *L parallel with RC.*

Fig. 5.8 : *RLC parallel resonant networks.*

Case i : Parallel combination of R, L and C

Consider the RLC parallel circuit shown in Fig. 5.9, excited by a sinusoidal source of variable frequency. When the frequency of the source is varied, the resonance occurs at a particular frequency. The expressions for resonance frequency and dynamic resistance for the RLC parallel circuit of Fig. 5.9 are given below:

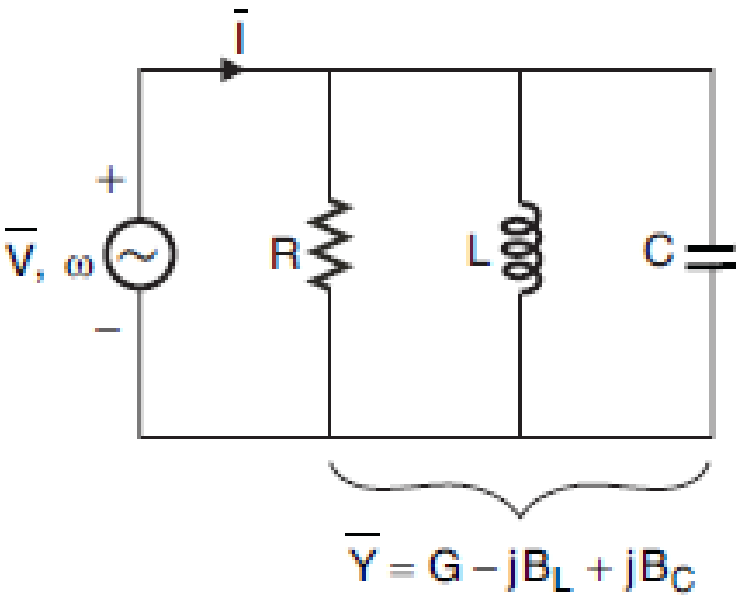

Fig. 5.9.

Resonant angular frequency, $\omega_r = \dfrac{1}{\sqrt{LC}}$ in *rad/s*
Resonant frequency, $f_r = \dfrac{\omega_r}{2\pi} = \dfrac{1}{2\pi\sqrt{LC}}$ in *Hz*
Dynamic resistance, $R_{dynamic} = R$

Resonance frequency in RLC parallel circuit

Consider the parallel combination of R, L and C shown in Fig.5.9.

Let, $\overline{Y}$ = *Admittance of the parallel combination of R, L and C.*

Now, $\overline{Y} = G - jB_L + jB_C = \frac{1}{R} - j\frac{1}{\omega L} + j\omega C$

$$= \frac{1}{R} + j\left(\omega C - \frac{1}{\omega L}\right)$$

$$\boxed{G = \frac{1}{R} \;;\; B_L = \frac{1}{\omega L} \;;\; B_C = \omega C}$$

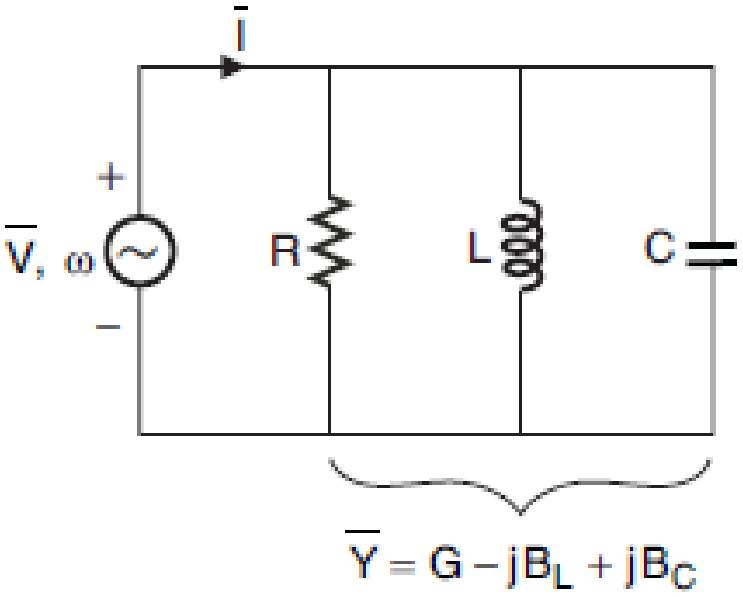

Fig. 5.9.

At resonant frequency ω_r, *the circuit behaves as a purely resistive circuit and so the imaginary part of admittance is zero.*

$$\therefore \quad At \;\; \omega = \omega_r \;, \quad \omega_r C - \frac{1}{\omega_r L} = 0$$

Resonance frequency in RLC parallel circuit

$$\therefore \frac{1}{\omega_r L} = \omega_r C$$

$$\therefore \omega_r^2 = \frac{1}{LC}$$

$$\therefore \omega_r = \frac{1}{\sqrt{LC}}$$

$$\therefore f_r = \frac{\omega_r}{2\pi} \Rightarrow f_r = \frac{1}{2\pi\sqrt{LC}}$$

$\boxed{\omega = 2\pi f}$

Let, $\overline{Y}_r$ be the admittance at resonance and it is obtained by substituting $\omega = \omega_r$ in equation (5.53).

$$\therefore \overline{Y}_r = \frac{1}{R} + j\left(\omega_r C - \frac{1}{\omega_r L}\right) = \frac{1}{R}$$

Using equation (5.54)

Dynamic resistance is the inverse of the admittance at resonance.

$$\therefore \text{Dynamic resistance, } R_{dynamic} = \frac{1}{\overline{Y}_r} = R$$

Resonance frequency in RLC parallel circuit

RLC Parallel Circuit	Resonant frequency		Dynamic resistance
	ω_r in *rad/s*	f_r in *Hz*	$R_{dynamic}$ in Ω
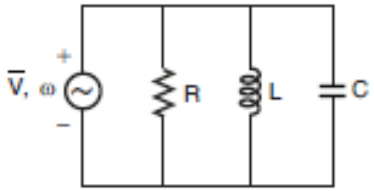	$\omega_r = \frac{1}{\sqrt{LC}}$	$f_r = \frac{1}{2\pi\sqrt{LC}}$	$R_{dynamic} = R$
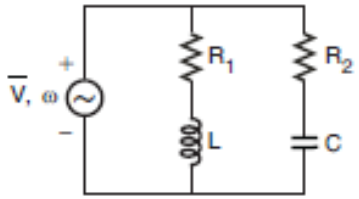	$\omega_r = \frac{1}{\sqrt{LC}}\sqrt{\frac{L-CR_1^2}{L-CR_2^2}}$	$f_r = \frac{1}{2\pi\sqrt{LC}}\sqrt{\frac{L-CR_1^2}{L-CR_2^2}}$	$R_{dynamic} = \frac{1}{\frac{R_1}{R_1^2+X_{Lr}^2}+\frac{R_2}{R_2^2+X_{Cr}^2}}$ $X_{Lr} = \omega_r L \;;\; X_{Cr} = \frac{1}{\omega_r C}$
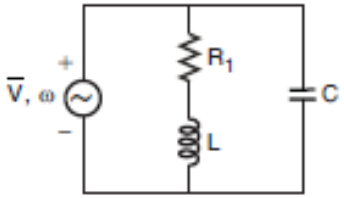	$\omega_r = \frac{1}{\sqrt{LC}}\sqrt{1-\frac{CR_1^2}{L}}$	$f_r = \frac{1}{2\pi\sqrt{LC}}\sqrt{1-\frac{CR_1^2}{L}}$	$R_{dynamic} = \frac{L}{R_1 C}$
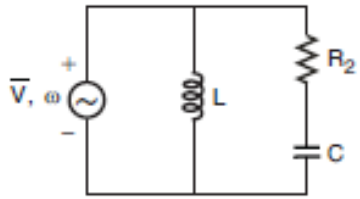	$\omega_r = \frac{1}{\sqrt{LC}}\sqrt{\frac{L}{L-CR_2^2}}$	$f_r = \frac{1}{2\pi\sqrt{LC}}\sqrt{\frac{L}{L-CR_2^2}}$	$R_{dynamic} = \frac{L}{R_2 C}$

Frequency Response of Parallel RLC Circuit

Consider the parallel RLC circuit excited by a sinusoidal source of variable frequency as shown in Fig. 5.14. The admittance $\overline{Y}$ of the circuit is given by,

$$\overline{Y} = G - jB_L + jB_C = G + j(B_C - B_L) \qquad .....(5.72)$$

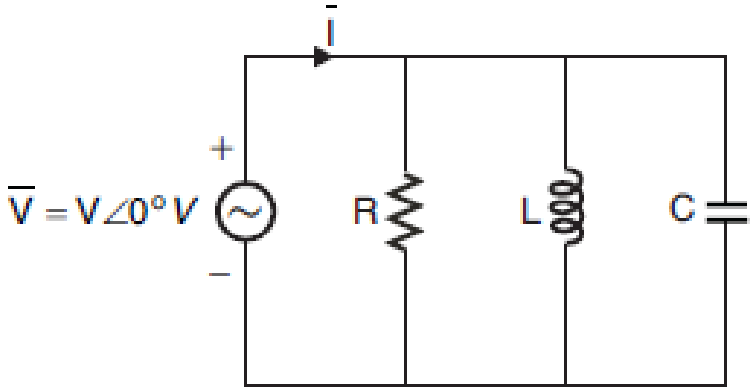

Fig. 5.14.

Let, $\overline{I}_r$ = Current at resonance.

$\overline{Y}_r$ = Admittace at resonance.

At resonance, $B_L = B_C$

Therefore, from equation (5.72), we get,

$$\text{Admittance at resonance, } \overline{Y}_r = \frac{1}{R} \qquad .....(5.73)$$

$$\therefore \text{ Current at resonance, } \overline{I}_r = \overline{V}\,\overline{Y}_r = V\angle 0^\circ \times \frac{1}{R} = \frac{V}{R}\angle 0^\circ = I_r\angle 0^\circ A \qquad .....(5.74)$$

$$\text{where, } I_r = \frac{V}{R} = \text{Magnitude of current at resonance} \qquad .....(5.75)$$

Frequency Response of Parallel RLC Circuit

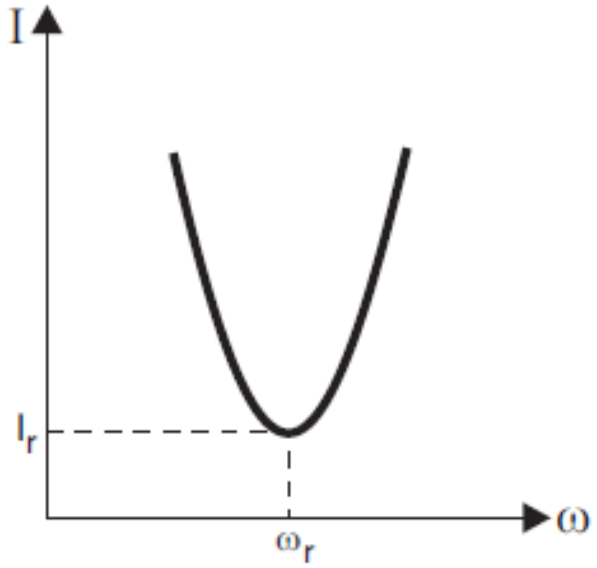

Fig. a : Current vs frequency.

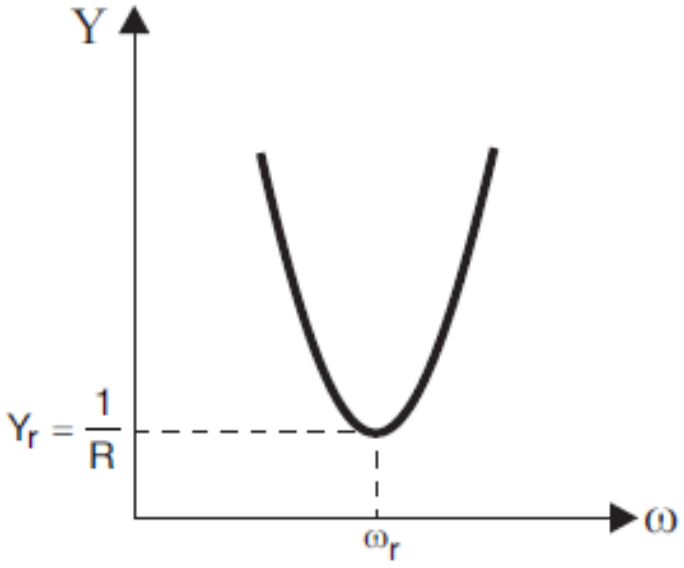

Fig. b : Admittance vs frequency.

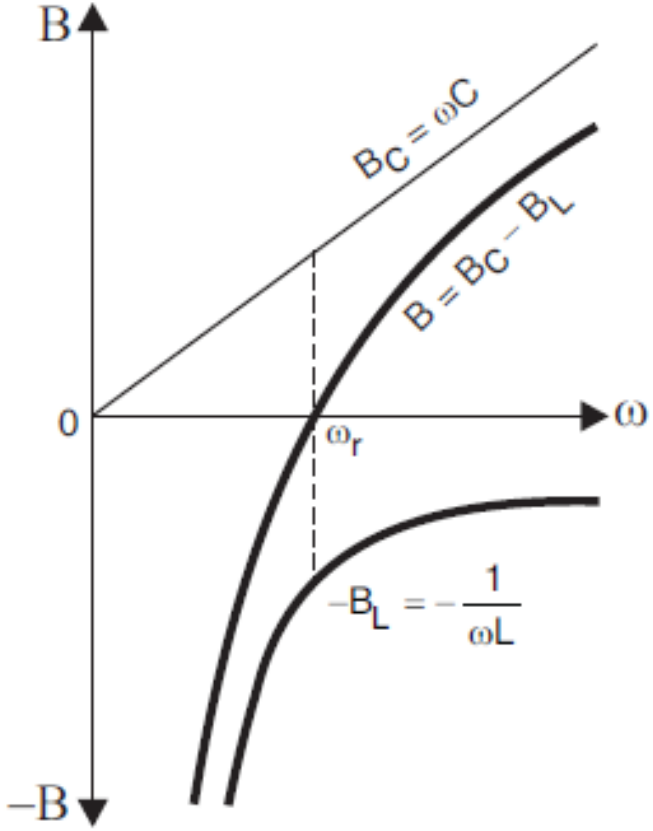

Fig. c : Susceptance vs frequency.

Fig. 5.15 : *Characteristics of parallel resonance.*

Q-Factor(Quality Factor) of RLC Parallel Circuit

In an RLC parallel circuit, due to stored energy in the inductor and capacitor, the current through these devices will be greater than the current supplied by the source. In other words, we can say that there is a current magnification or amplification. **Current magnification** can be expressed by a factor called **Quality factor (Q)**, which is defined as the ratio of maximum energy stored to the energy dissipated in one period.

$$\therefore \quad \text{Quality factor, } Q = 2\pi \times \frac{\text{Maximum energy stored}}{\text{Energy dissipated in one period}} \qquad .....(5.79)$$

The term 2π is introduced to simplify the expression for quality factor.

$$\text{Quality factor at resonance, } Q_r = 2\pi \times \frac{\text{Maximum energy stored at resonance}}{\text{Energy dissipated in one period at resonance}} \qquad .....(5.80)$$

Here, $\boxed{Q_r = \omega_r CR}$ .....(5.81)

At resonance, $\omega_r = \frac{1}{\sqrt{LC}}$, $\omega_r^2 = \frac{1}{LC}$ and $C = \frac{1}{\omega_r^2 L}$

Therefore, the quality factor at resonance, Q_r can also be expressed as shown below:

$$Q_r = \omega_r CR = \omega_r \times \frac{1}{\omega_r^2 L} \times R = \frac{R}{\omega_r L} \qquad \boxed{\therefore \quad Q_r = \frac{R}{\omega_r L}} \qquad .....(5.82)$$

$$= \omega_r CR = \frac{1}{\sqrt{LC}} \times CR = R\sqrt{\frac{C}{L}} \qquad \boxed{\therefore \quad Q_r = R\sqrt{\frac{C}{L}}} \qquad .....(5.83)$$

For frequencies less than the resonant frequency, the RLC parallel circuit behaves as an inductive circuit.

$$\boxed{\therefore \quad \text{When} \quad \omega_r \le \omega_r, \quad Q = \frac{R}{\omega L}} \qquad .....(5.84)$$

For frequencies higher than the resonant frequency, the RLC parallel circuit behaves as a capacitive circuit.

$$\boxed{\therefore \quad \text{When} \quad \omega \ge \omega_r, \quad Q = \omega CR} \qquad .....(5.85)$$

Consider a RLC parallel circuit shown in Fig. 5.17, excited by a sinusoidal voltage source of frequency, ω.

Let, $\overline{V}$ be the reference phasor.

$$\therefore\ \overline{V} = V\angle 0^o\ V$$

Let, v = Instantaneous value of voltage

$$\therefore\ v = V_m \sin \omega t \qquad .....(5.86)$$

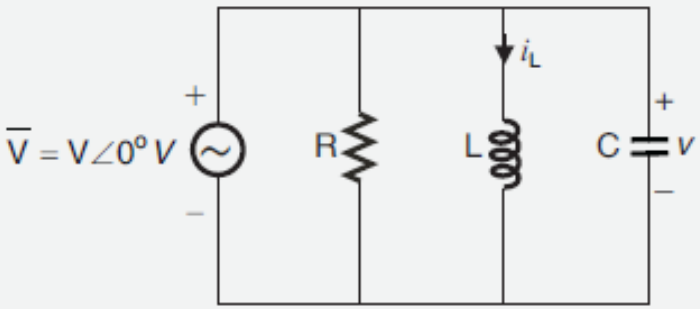

Fig. 5.17.

Let, w_L = Instantaneous value of energy stored in inductor

w_C = Instantaneous value of energy stored in capacitor

w = Total instantaneous energy stored in the RLC circuit

w_r = Total instantaneous energy stored in the RLC circuit at resonance.

We know that,

$$w_L = \frac{1}{2} L i_L^2$$

Using equation (4.11) of Chapter 4

$$= \frac{1}{2} L \left[\frac{1}{L}\int v\, dt\right]^2$$

$$i_L = \frac{1}{L}\int v\, dt$$

$$= \frac{1}{2} L \left[\frac{1}{L}\int V_m \sin \omega t\, dt\right]^2$$

Using equation (5.86)

$$= \frac{1}{2} L \left[\frac{1}{L}\left(-V_m \frac{\cos \omega t}{\omega}\right)\right]^2$$

$$= \frac{V_m^2}{2\omega^2 L} \cos^2 \omega t \qquad .....(5.87)$$

We know that,

$$w_C = \frac{1}{2}CV^2$$ Using equation (4.16) of Chapter - 4

$$= \frac{1}{2}C\left(V_m \sin \omega t\right)^2$$ Using equation (5.86)

$$= \frac{1}{2}C\,V_m^2 \sin^2 \omega t \qquad .....(5.88)$$

Now, $$w = w_L + w_C = \frac{V_m^2}{2\omega^2 L}\cos^2 \omega t + \frac{1}{2}C\,V_m^2 \sin^2 \omega t$$ Using equations (5.87) and (5.88)

$$= \frac{V_m^2}{2}\left[C\sin^2 \omega t + \frac{1}{\omega^2 L}\cos^2 \omega t\right]$$

$$\therefore\ w_r = w\Big|_{\omega=\omega_r} = \frac{V_m^2}{2}\left[C\sin^2 \omega t + \frac{1}{\omega^2 L}\cos^2 \omega t\right]\Bigg|_{\omega=\omega_r} = \frac{V_m^2}{2}\left[C\sin^2 \omega_r t + \frac{1}{\omega_r^2 L}\cos^2 \omega_r t\right]$$

$$= \frac{V_m^2}{2}\left[C\sin^2 \omega_r t + \frac{LC}{L}\cos^2 \omega_r t\right]$$ $$\omega_r = \frac{1}{\sqrt{LC}} \Rightarrow \frac{1}{\omega_r^2} = LC$$

$$= \frac{V_m^2 C}{2}\left[\sin^2 \omega_r t + \cos^2 \omega_r t\right]$$ $$\sin^2\theta + \cos^2\theta = 1$$

$$= \frac{V_m^2 C}{2} \qquad .....(5.89)$$

Let, W_{mr} = *Maximum energy stored at resonance*

$$\therefore \quad W_{mr} = w_r = \frac{V_m^2 C}{2}$$

In the RLC parallel circuit, the energy is dissipated by the resistor

Let, W_R = *Energy dissipated in resistor in one period*

W_{Rr} = *Energy dissipated in resistor in one period at resonance*

$\therefore \quad W_R$ = *Power × Time Period.*

$$= \frac{V^2}{R} \times T$$

V = *RMS value of voltage*

$$= \left(\frac{V_m}{\sqrt{2}}\right)^2 \times \frac{1}{R} \times \frac{1}{f}$$

$V = \frac{V_m}{\sqrt{2}}$ $\quad T = \frac{1}{f}$

$$= \frac{V_m^2}{2} \times \frac{1}{R} \times \frac{2\pi}{\omega}$$

$\omega = 2\pi f \Rightarrow \frac{1}{f} = \frac{2\pi}{\omega}$

$$= \frac{\pi V_m^2}{\omega R}$$

$$\therefore \quad W_{Rr} = W_R\Big|_{\omega=\omega_r} = \frac{\pi V_m^2}{\omega_r R}$$

$$\therefore \quad Q_r = 2\pi \times \frac{W_{mr}}{W_{Rr}} = 2\pi \times W_{mr} \times \frac{1}{W_{Rr}}$$

$$= 2\pi \times \frac{V_m^2 C}{2} \times \frac{\omega_r R}{\pi V_m^2}$$

Using equations (5.90) and (5.92)

$$\therefore \quad Q_r = w_r CR$$

Equations for cut-off frequency and bandwidth (Parallel Resonance) are given below

$$\text{Higher cut-off angular frequency, } \omega_h = \frac{1}{2RC} + \sqrt{\left(\frac{1}{2RC}\right)^2 + \frac{1}{LC}} \text{ in } rad/s$$

$$\text{Lower cut-off angular frequency, } \omega_l = -\frac{1}{2RC} + \sqrt{\left(\frac{1}{2RC}\right)^2 + \frac{1}{LC}} \text{ in } rad/s$$

Alternatively,

$$\omega_h = \omega_r\left[\frac{1}{2Q_r} + \sqrt{1 + \frac{1}{4Q_r^2}}\right] \text{ in } rad/s$$

$$\omega_l = \omega_r\left[-\frac{1}{2Q_r} + \sqrt{1 + \frac{1}{4Q_r^2}}\right] \text{ in } rad/s$$

$$\text{Higher cut-off frequency, } f_h = \frac{\omega_h}{2\pi} = \frac{1}{2\pi}\left[\frac{1}{2RC} + \sqrt{\left(\frac{1}{2RC}\right)^2 + \frac{1}{LC}}\right] \text{ in } Hz$$

$$\text{Lower cut-off frequency, } f_l = \frac{\omega_h}{2\pi} = \frac{1}{2\pi}\left[-\frac{1}{2RC} + \sqrt{\left(\frac{1}{2RC}\right)^2 + \frac{1}{LC}}\right] \text{ in } Hz$$

$$\text{Bandwidth, } \beta = \frac{1}{RC} \text{ in } rad/s$$